COMBO CONVERSION INSTRUCTIONS

NOTE: PLEASE MAKE SURE THAT THE MACHINE HAS BEEN DISCONNECTED FROM THE POWER SOURCE BEFORE STARTING THE CONVERSION.

The process to change from the 5” gutter profile to the 6” profile and back again is considerably simplified by using locking pins with two secured positions that provide an easy change for either profile. A tool kit is provided with every combo machine. The tool kit is located inside the left side cover at the exit end of the machine.

When converting from one profile to the other, it is important to follow the instructions in order. Much time can be lost if instructions are not followed exactly. The order to convert 5” to 6” is not the same as converting 6” to 5”. Follow the instructions carefully.

5” TO 6” CONVERSION

STEP I. Remove Covers.

(see Illustration A.1 for lid details)

(see Illustration A.1 for tool kit location)

The lids that need to be removed are fastened in place with quarter turn screws. To remove aluminum lids #1-#4, use a flat head screwdriver, turn screws counter clockwise one quarter turn.

STEP II. Remove Guillotine.

(see Illustration A.2 for guillotine location)

Remove the guillotine with the 4 (four) A screws that attach the guillotine to the machine frame and set the guillotine aside.

STEP III. Move Bead Assembly.

(see Illustration A.2)

Loosen the 2 (two) E bolts and slide the bead assembly up for the 6” position. The positions are marked on the mounting block for easy placement. Re-tighten the E bolts.

STEP IV. Remove Back Bell Roller.

(see Illustration A.2)

Remove the back bell roller using the bolt (C) that holds the center shaft in place. Set the back bell roller aside.

STEP V. Move Back Guide Bar.

(see Illustration A.2)

Loosen the 5 (five) bolts on the back guide bar, move it away from the skate as far as possible. Re-tighten the 5 bolts.

STEP VI. Remove Exit Upper #3 Roller Back Side.

(see Illustration A.2)

Remove the back side exit top roller by removing the “red” (B) 1/4-20 x 1/2” flush head cap screw located in the center of the roller. Turn the roller end for end and replace it back onto the shaft by aligning the threaded holes in the shaft with the clearance holes on the exit upper #3 top roller backside. Failure to align the roller properly will cause damage.

STEP VII. Re-Install the Back Bell Roller.

(see Illustration A.2)

The back bell roller is replace into the new position labeled 6”.

STEP VIII. Install Guillotine.

(see Illustration A.2)

Remove the 6” guillotine from the side of the machine and install it on the frame with the 4 (four) (A) screws. The guillotine is factory preset and should not need adjustment.

STEP IX. Store 5” Guillotine.

(see Illustration A.2)

Store the 5” guillotine on the side of the machine.

STEP X. Move Skate Rollers.

(see Illustration A.2)

There are 4 (four) center skates in the combo machine. Each of these skates have retractable rear skate forming rollers that expand between the 5” and 6” profile. To change, pull the adjusting pin up at each skate bearing until the pin disengages from the retractable skate shaft. Move the forming roller to the 6” position and push the adjusting pin back into place. Repeat this process for all 13 (thirteen) rear skate forming rollers.

STEP XI. Move Entry Guide Shoes.

(see Illustration A.2)

There are 2 (two) split collars used as stops on the entrance guide shaft to locate each entrance guide shoe for the 5” and 6” gutter position. To position the entrance guide shoes from the 5” to the 6” profile, slide the entrance guide shoes against the outer most collars on the shaft.

STEP XII. Move Face Box Assembly Stations.

(see Illustration A.3)

To move the 3 (three) face box roller assemblies, pull the quick release pin that is located at the top of each assembly. Pull the face roller assembly up to the 6” gutter position and replace the pin back completely through the hole. Repeat this step for all the face box assemblies.

STEP XIII. Move Lip Box Assembly.

(see Illustration A.3)

Loosen the 2 (two) bolts (G) at the exit end of lip box and the 2 (two) bolts (H) at the entrance end, and move the lip box up and out on the box mounts. Re-tighten bolts (G) and (H).

STEP XIV. Remove 5” Inside Box Roller Bar Assembly.

(see Illustration A.3)

To remove the 5” inside box roller bar assembly, remove the 2 (two) “red” (F) screws on the top of the box. Place this assembly to the side.

STEP XV. Move Outside Box Rollers.

(see Illustration A.3)

There are 6 (six) quick release pins at the bottom of the box. Remove the pin and move the bottom portion of the outside roller down to the 6” position. Replace the quick release pin back through the hole.

STEP XVI. Install 6” Inside Box Roller Bar Assembly.

(see Illustration A.3)

Switch and install the 6” inside box roller bar assembly. This assembly is labeled as (6). The tall rollers located in the #1 station and the #2 position. The short rollers located in the #3 station and the #4 position. Replace the “red” station screws (F) and tighten.

STEP XVII. Store 5” Inside Box Roller Bar Assembly.

See Illustration A.2 for storage location for the box roller bar assembly.

STEP XVIII. Replace Covers.

(see Illustration A.1)

Replace the lids #1, #2, and #3 on the top of the machine. Replace the side cover #4. Turn the cover screws one quarter turn clockwise to re-fasten.

STEP XIX. Move Upright Baseplate.

(see Illustration A.3)

Loosen the four (L) screws as shown. Slide the upright baseplate to the 6” position. Re-tighten the screws. Rotate the upright to access the 2 (two) bolts on the face side.

STEP XX. Move Spool Half.

(see Illustration A.3)

NOTE: Pins must be reinstalled in holes stamped for the 6” position.

5” TO 6” COMBO CHANGE OVER

1. **UNPLUG MACHINE -** Eliminate electrical power source.

2. **REMOVE COVERS** - Remove covers containing quick release fasteners.

3. **REMOVE GUILLOTINE** - Remove 6” guillotine from machine.

4. **MOVE BACK GUIDE ROD** - Loosen guide rod bolts; slide guide rod away from skate.

5. **REMOVE BACK BELL ROLLER** - Remove from 5” position set to the side.

6. **REMOVE TOP #3 EXIT DRIVE ROLLER** - Remove and re-install top #3 back drive roller in 6” position. Roller gets turned end for end and re-installed using the same 82 degree cap screws.

7. **RE-INSTALL BACK BELL WHEEL -** Re-install back bell wheel in the 6” position.

8. **INSTALL 6” GUILLOTINE** - Install 6” guillotine on machine.

9. **SECURE 5” GUILLOTINE** - Place 5” guillotine back to storage position.

10. **MOVE SKATE ROLLERS** - Pull release pins on skate rollers; move outwards to 6” position.

11. **MOVE ENTRANCE GUIDES** - Loosen cap screw on both entrance guides; move outwards to stop at 6” position.

12. **MOVE FACE BOX ROLLERS** - Remove pins and raise face box roller to 6” position.

13. **MOVE COMPLETE LIP BOX** - Move lip box to 6” position.

14. **REMOVE 5” INSIDE ROLLER BAR FROM BOX** - Remove red colored screws; remove roller bar and set to the side.

15. **MOVE LIP BOX ROLLERS** - Remove pins and lower bottom half of lip box roller to 6” position.

16. **INSTALL 6” INSIDE ROLLER BAR ASSEMBLY** - Remove 6” roller bar from storage position install

    in lip box.

17. **STORE 5” INSIDE ROLLER BAR** - Replace 6” inside roller bar from storage with 5”.

18. **RE-INSTALL COVERS** - Re-fasten covers and lids to machine.

19. **MOVE COIL SPOOL HALVES** - Position spool halves for 15” coil.

20. **MOVE UPRIGHT ASSEMBLY** - Move upright assembly to the left (end of slot).

A.1

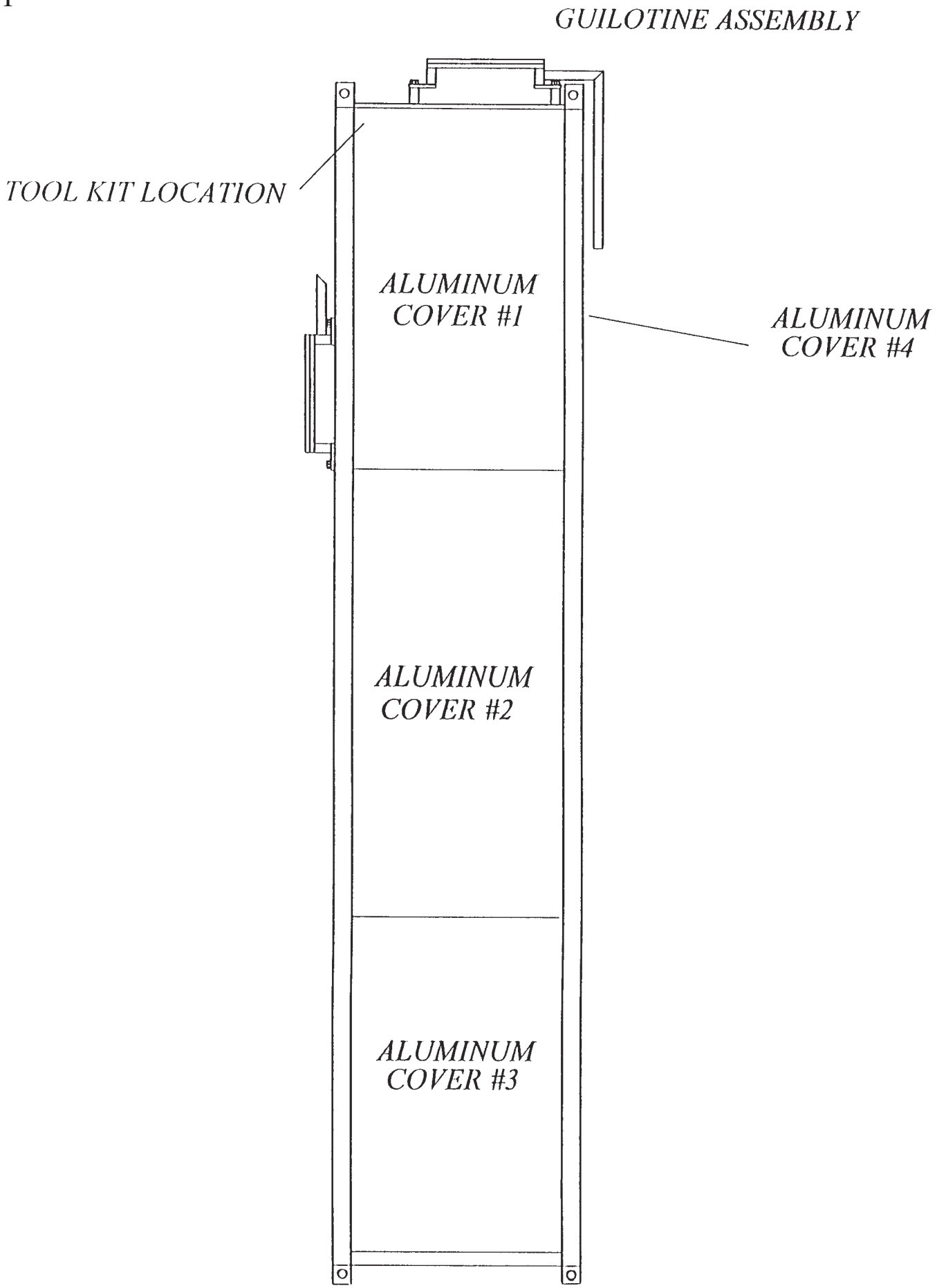
GUILOTINE ASSEMBLY
TOOL KIT LOCATION
ALUMINUM COVER #1
ALUMINUM COVER #4
ALUMINUM COVER #2
ALUMINUM COVER #3

A.2

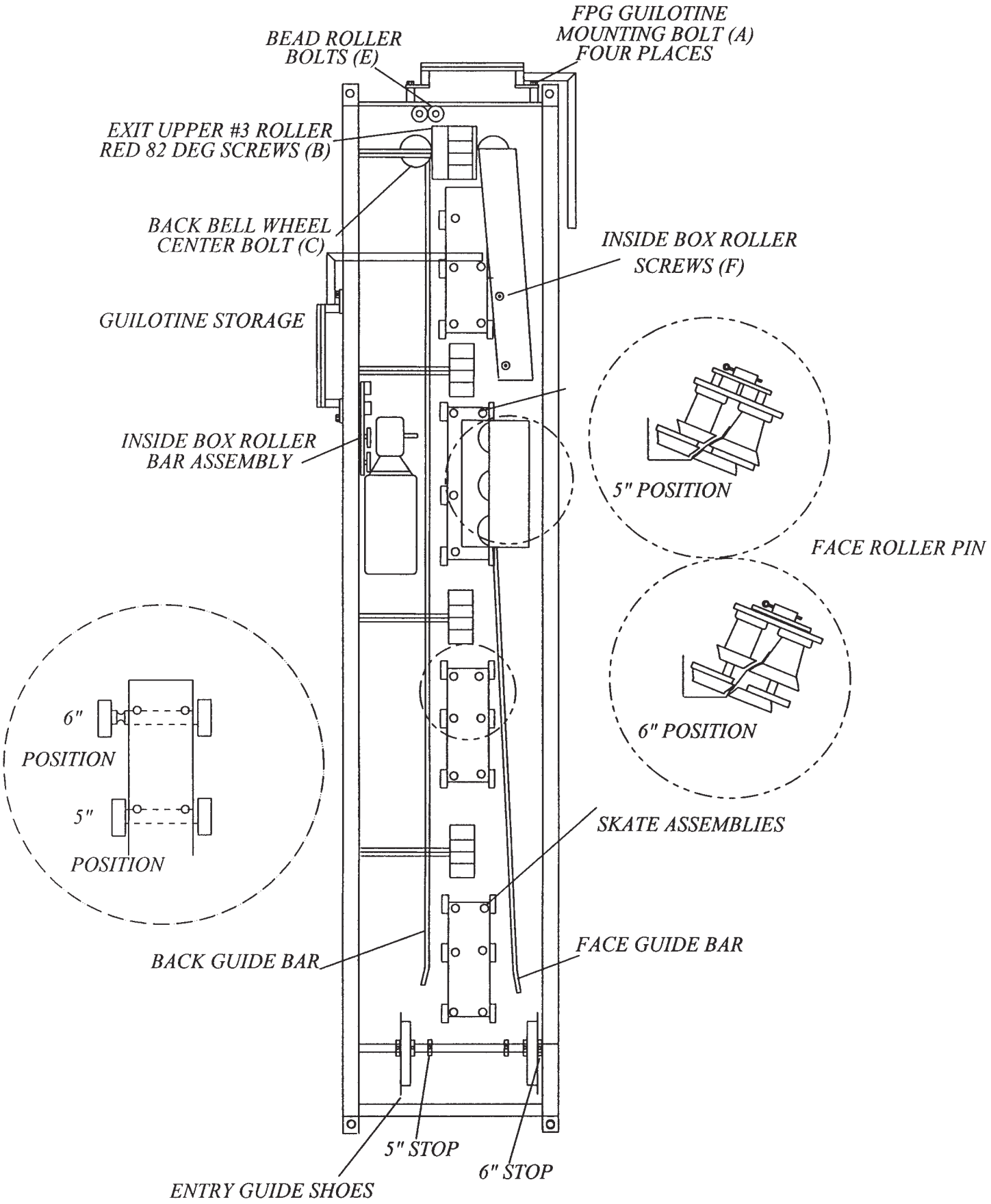
FPG GUILOTINE
MOUNTING BOLT (A)
FOUR PLACES
BEAD ROLLER
BOLTS (E)
EXIT UPPER #3 ROLLER
RED 82 DEG SCREWS (B)
BACK BELL WHEEL
CENTER BOLT (C)
INSIDE BOX ROLLER
SCREWS (F)
GUILOTINE STORAGE
INSIDE BOX ROLLER
BAR ASSEMBLY
5" POSITION
FACE ROLLER PIN
6" POSITION
6"
POSITION
5"
POSITION
SKATE ASSEMBLIES
BACK GUIDE BAR
FACE GUIDE BAR
5" STOP
6" STOP
ENTRY GUIDE SHOES

A.3

LIP FORMING BOX

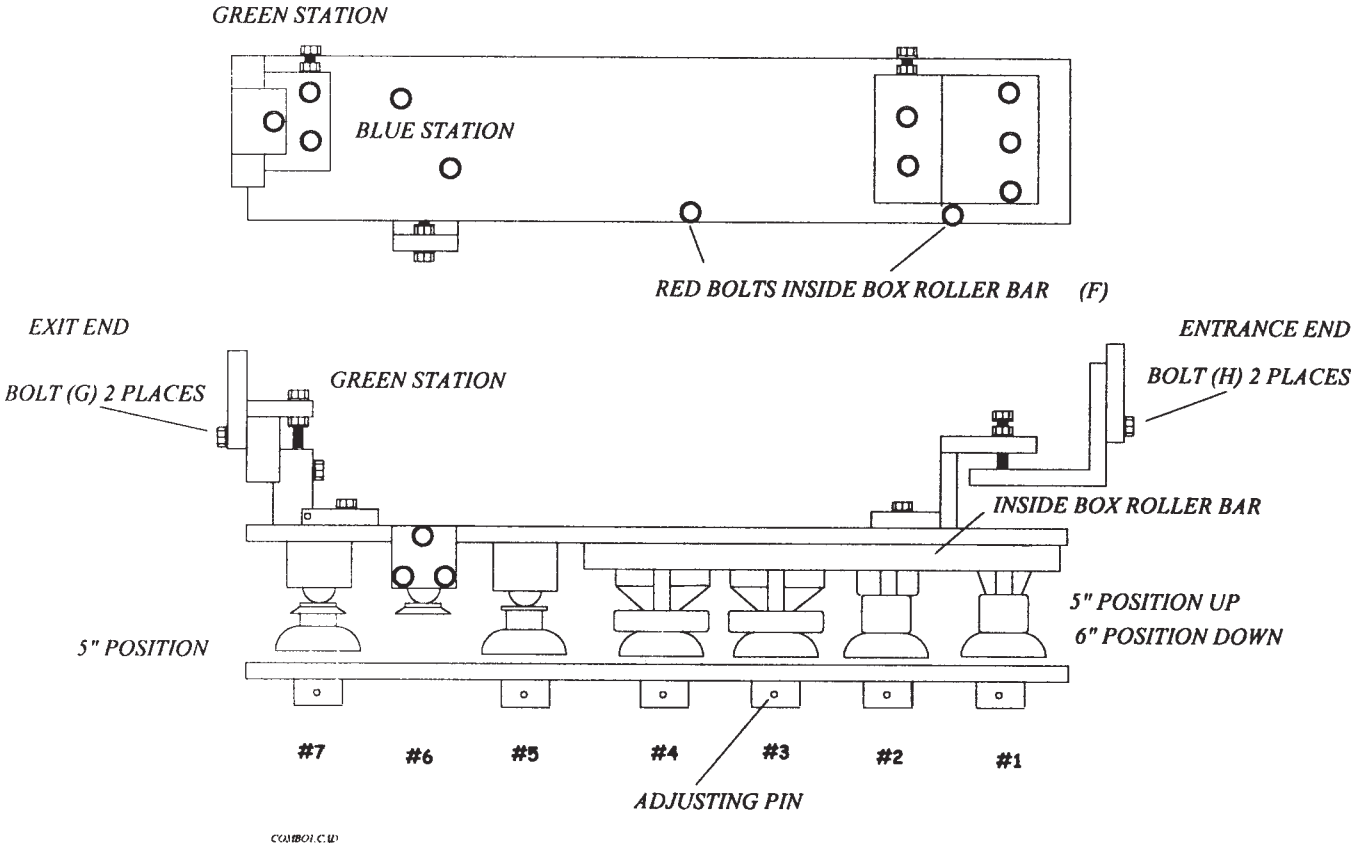

A.4
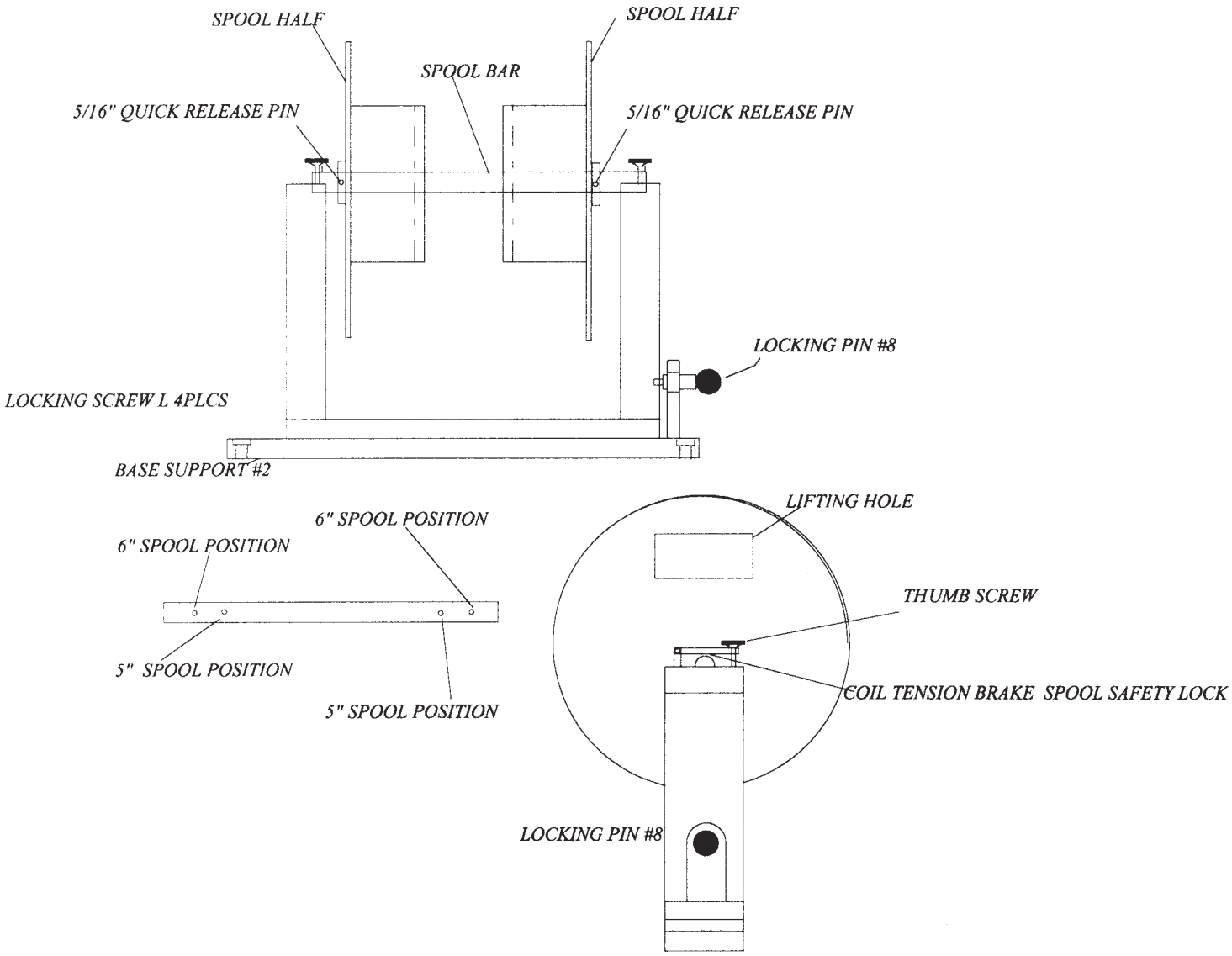
SPOOL AND UPRIGHT ASSEMBLY